INTIALS: –
JOB NUMBER: 7675
DATE: –

MAIN FILE: –
DEPT: –
DEALER: –

~~PRODUCTION APPROVED~~

NOTES:
1. OVERALL HEIGHT IS IN LOADED CONDITION. UNLOADED HEIGHTS MAY BE 4" ABOVE HEIGHTS SHOWN.
2. DO NOT SCALE DRAWING.
3. ALL DIMENSIONS ARE APPROXIMATE AND SUBJECT TO ENGINEERING CHANGES.
4. DRAWING MAY OR MAY NOT SHOW ALL ITEMS AS DESCRIBED IN THE WRITTEN DETAIL SPECIFICATIONS.
5. INCLUSION OF AN ITEM ON THE DRAWING DOES NOT CONSTITUTE INCLUSION OF THAT ITEM WITH THE FINAL DELIVERED UNIT.
6. THE EFFECTIVE DOOR OPENINGS WILL BE APPROX. 2" LESS THAN THE NOTED COMPARTMENT OPENING FOR ROLL UP DOORS AND UP TO APPROX. 4" LESS FOR HINGED DOORS

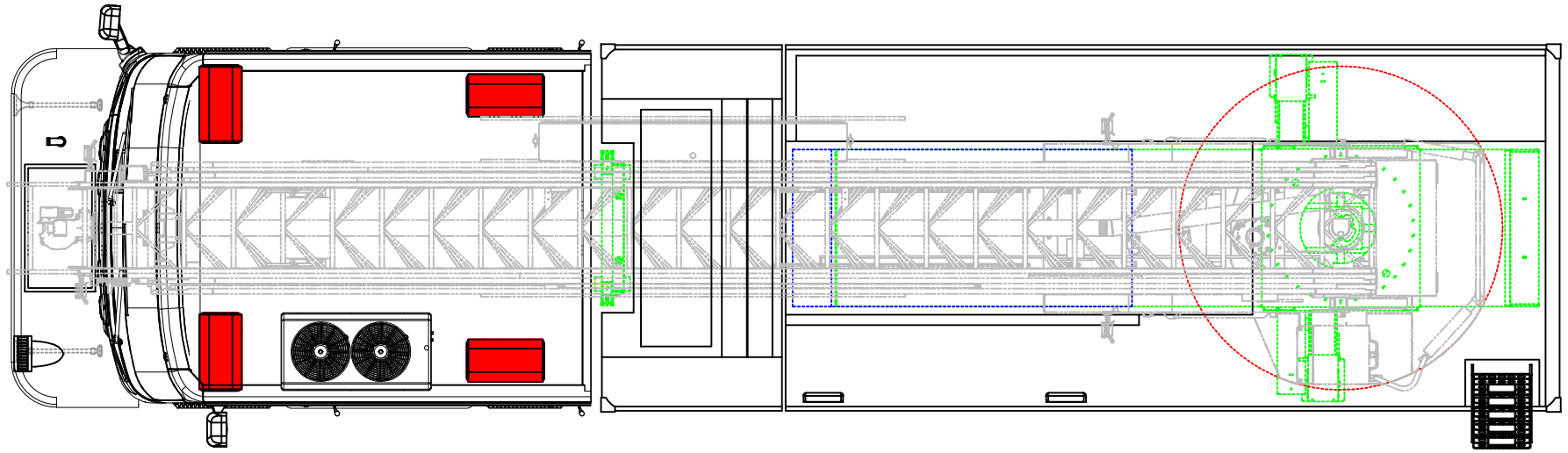

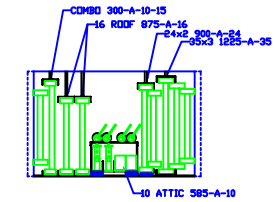

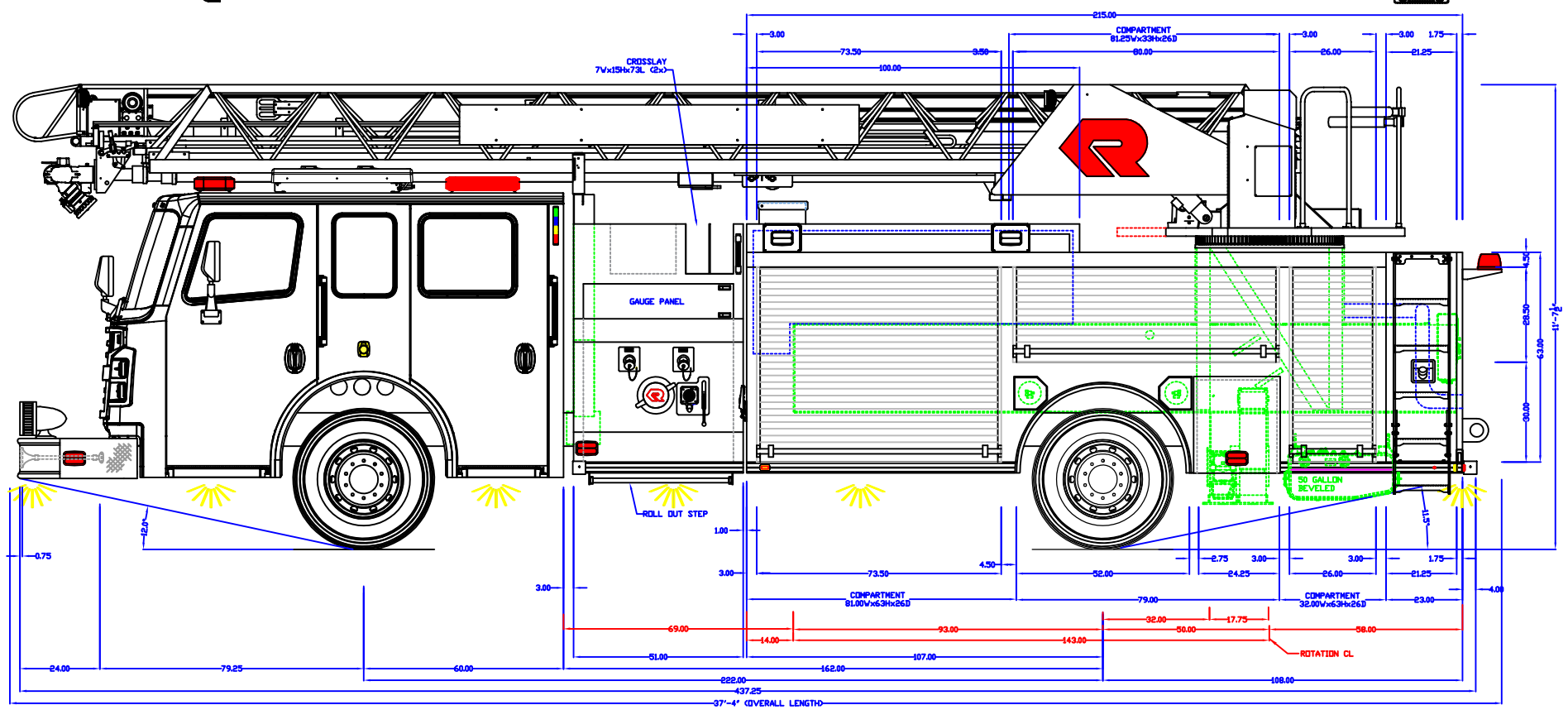

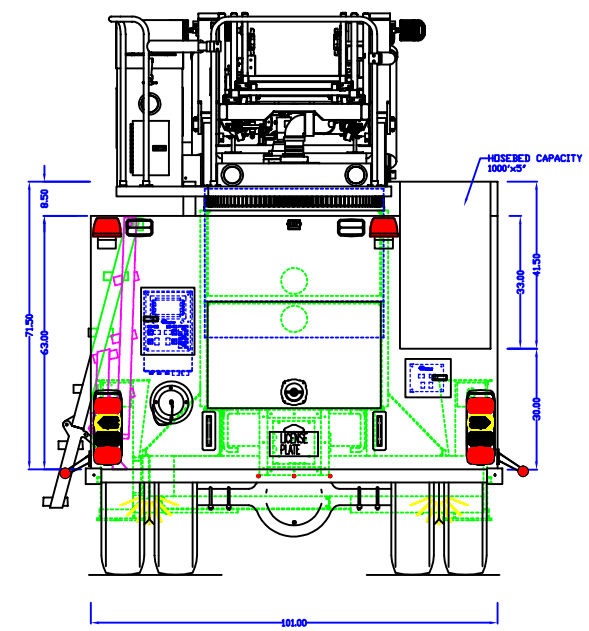

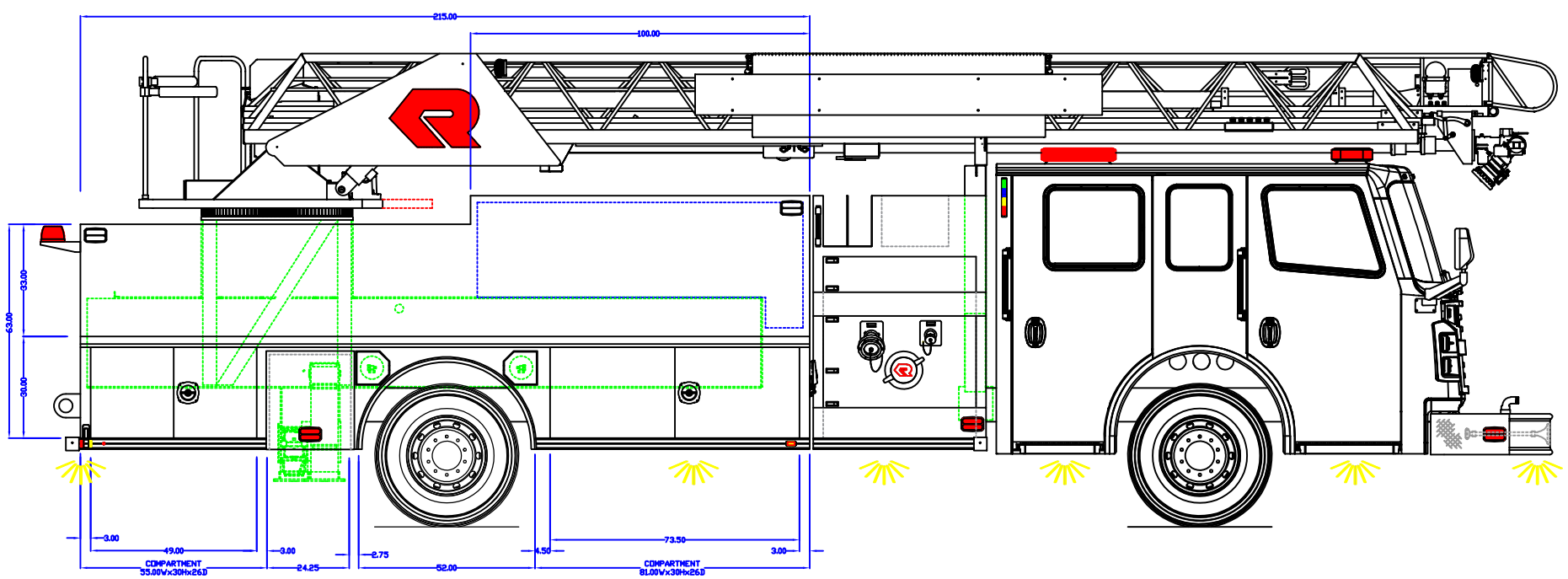

APPROVED BY:	
CHASSIS:	COMMANDER 6000
PUMP:	ROSENBAUER 1500 GPM
TANK:	POLY/400
PANEL MATL:	LINE-X
COMP INTERIOR:	SPATTER PAINTED
MAXIMUM HEIGHT	NONE
MAXIMUM LENGTH	NONE
BODY WIDTH	101"

REVISED: –	DATE: –
REVISED: SRN	DATE: 09/30/22
REVISED: SRN	DATE: 09/29/22
DRAWN: BPC	DATE: 08-22-2022

PROPRIETARY AND CONFIDENTIAL
THE INFORMATION CONTAINED IN THIS DRAWING IS THE SOLE PROPERTY OF ROSENBAUER. ANY REPRODUCTION IN PART OR AS A WHOLE WITHOUT THE WRITTEN PERMISSION OF ROSENBAUER IS PROHIBITED.

RSD STOCK 78' VIPER

rosenbauer

ROSENBAUER FX 1/8"

DRAWING NUMBER: RSD STOCK 78' VIPER 2022

REV: 1